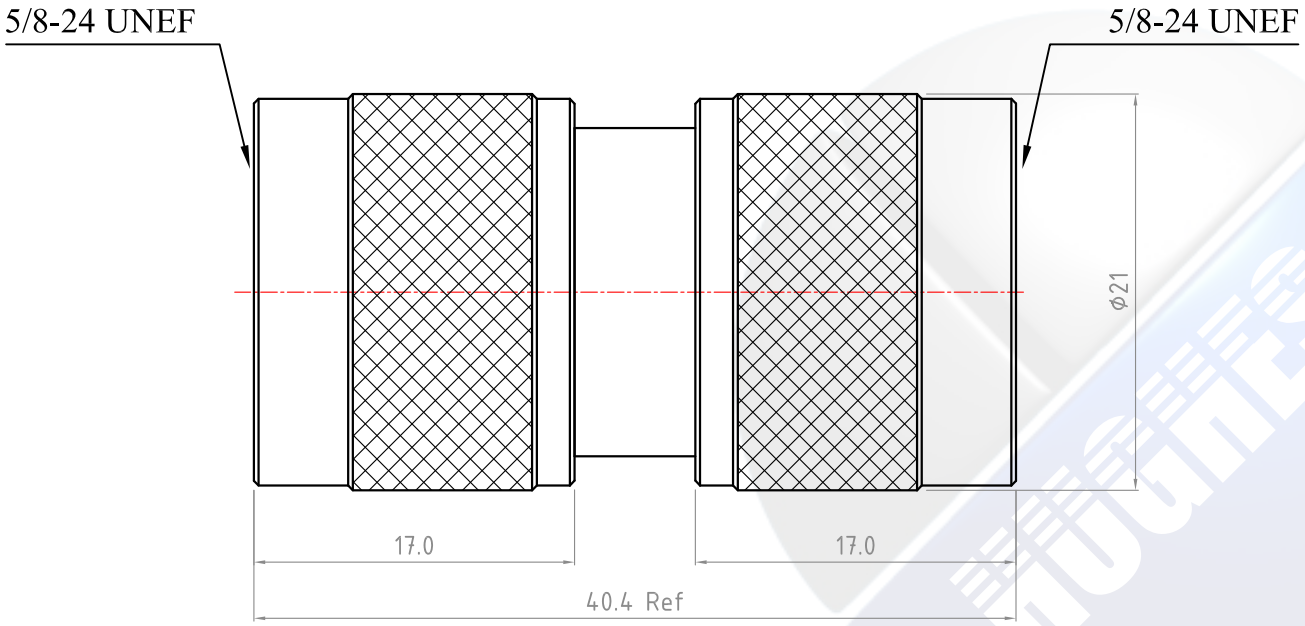

Specification:

Electrical:

Impedance: 50 ohm
Frequency Range: 0 to 12.4 Ghz
VSWR: 1.15+0.015 X f GHz max
Voltage Rating: 1,500V rms max
Dielectric Strength: 2,500V rms max
Contact Resistance: centre contact=1.0 milliohms
Outer contact=2.0 milliohms
RF Leakage: -(90- f GHz) db min.
Insertion Loss: 0.05 dB max. X √f GHz
Insulation Resistance 5,000 Megohms min.

Mechanical & Environmental

Mating: 5/8"-24 threaded coupling
Durability: 500 matings
Coupling Nut Retention: 100 lbs min.
Temperature Range: -65 deg. C to 165 deg. C
Vibration: MIL-STD-202 Method 204 Test Cond. B
Salt Spray: MIL-STD-202 Method 101 Test Cond. B
Temperature Cycling: MIL-STD-202 Method 107
Test Cond. B

Material:

Connector Body: Brass with Nickel or Silver plating
Centre Contact: Brass with Gold plating
Insulation: Teflon
Crimp Ferrule: Annealed Copper

Hughes Electronics Ltd
Unit G, Southwark business Ctr
Ayres Street, London, SE1 1EG
Tel: 020 7378 1400
Fax: 020 7378 1434
Email:sales@hugheselectronics.co.uk
www.hugheslelectronics.co.uk

Title: N Type Plug to Plug adaptor

Part no: 13-60913

File:

Date: 26/03/2013 **Issue No** 1 **Scale:** NTS

Changes log:

Drawn:	J. S.	_____
Approved:	J. W.	_____
Checked:	L. V.	_____
QA:	G. R.	_____

Compliance:

RoHS Compliant