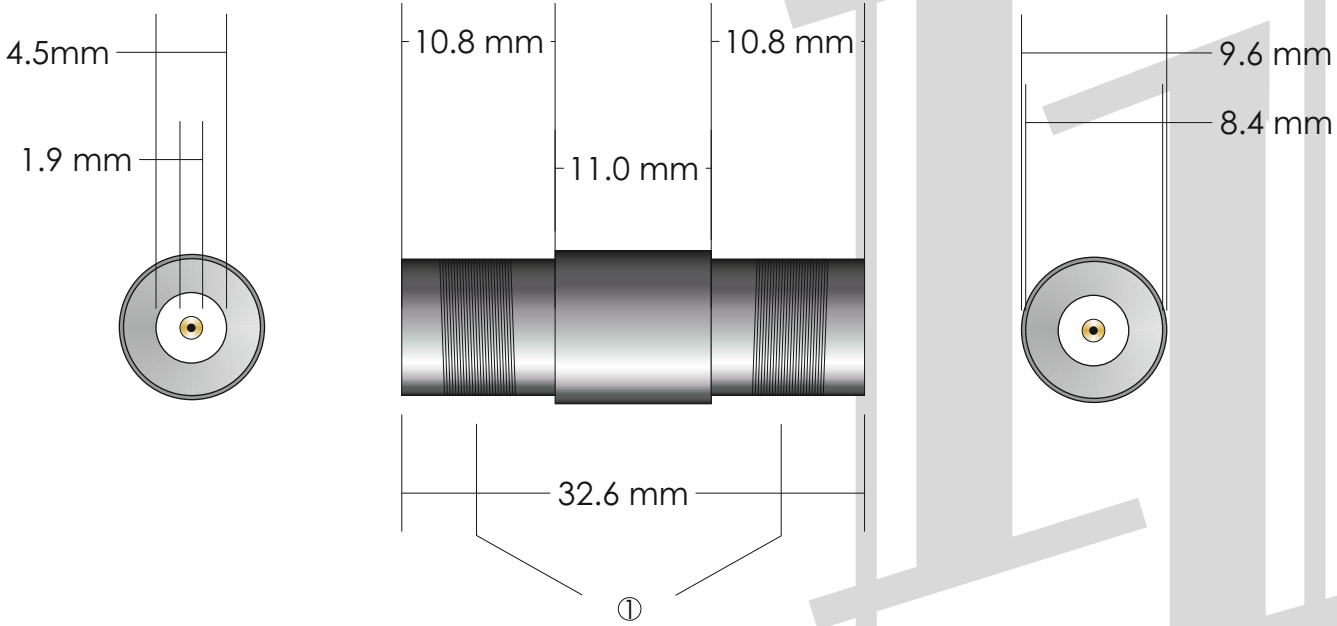

①: TNC Socket

Specification:
Electrical:

Impedance: 50 ohm
Frequency Range: 0 to 11.0 Ghz
VSWR: 1.3 max
Voltage Rating: 500V rms max
Dielectric Strength: 1,500V rms max
Contact Resistance: centre contact=1.5 milliohms
Outer contact=0.2 milliohms
RF Leakage: -55db min. @3 Ghz
Insertion Loss: 2dB max. @3 Ghz
Insulation Resistance 5,000 Megohms min.

Mechanical & Environmental

Mating: 7/16" 28 threaded Coupling
Durability: 500 matings
Coupling Nut Retention: 100 lbs min.
Temperature Range: -65 deg. C to 165 deg. C
Vibration: MIL-STD-202 Method 204 Test Cond. B
Salt Spray: MIL-STD-202 Method 101 Test Cond. B

Material:

Connector Body: Brass with Nickel or Silver plating
Centre Contact: Phosphor Bronze with Gold plating
Insulation: Teflon or Delrin
Crimp Ferrule: Annealed Copper

Hughes Electronics
Unit G, Southwark business Ctr
Ayres Street, London, SE1 1EG
Tel: 020 7378 1400
Fax: 020 7378 1434
Email: info@hugheselectronics.co.uk
www.hugheslelectronics.co.uk

Title: TNC FEMALE-FEMALE INLINE	Issue No:2	Checked: Yes
Part no 04-40012	Date:31-07-03	Approved: Yes
File: s:\products\technical drawings original\04\04-40012.cdr	Scale: N.T.S	Initial: LORENZ